10.ABS Warning Light / Brake Warning Light Illumination Pattern

A: INSPECTION

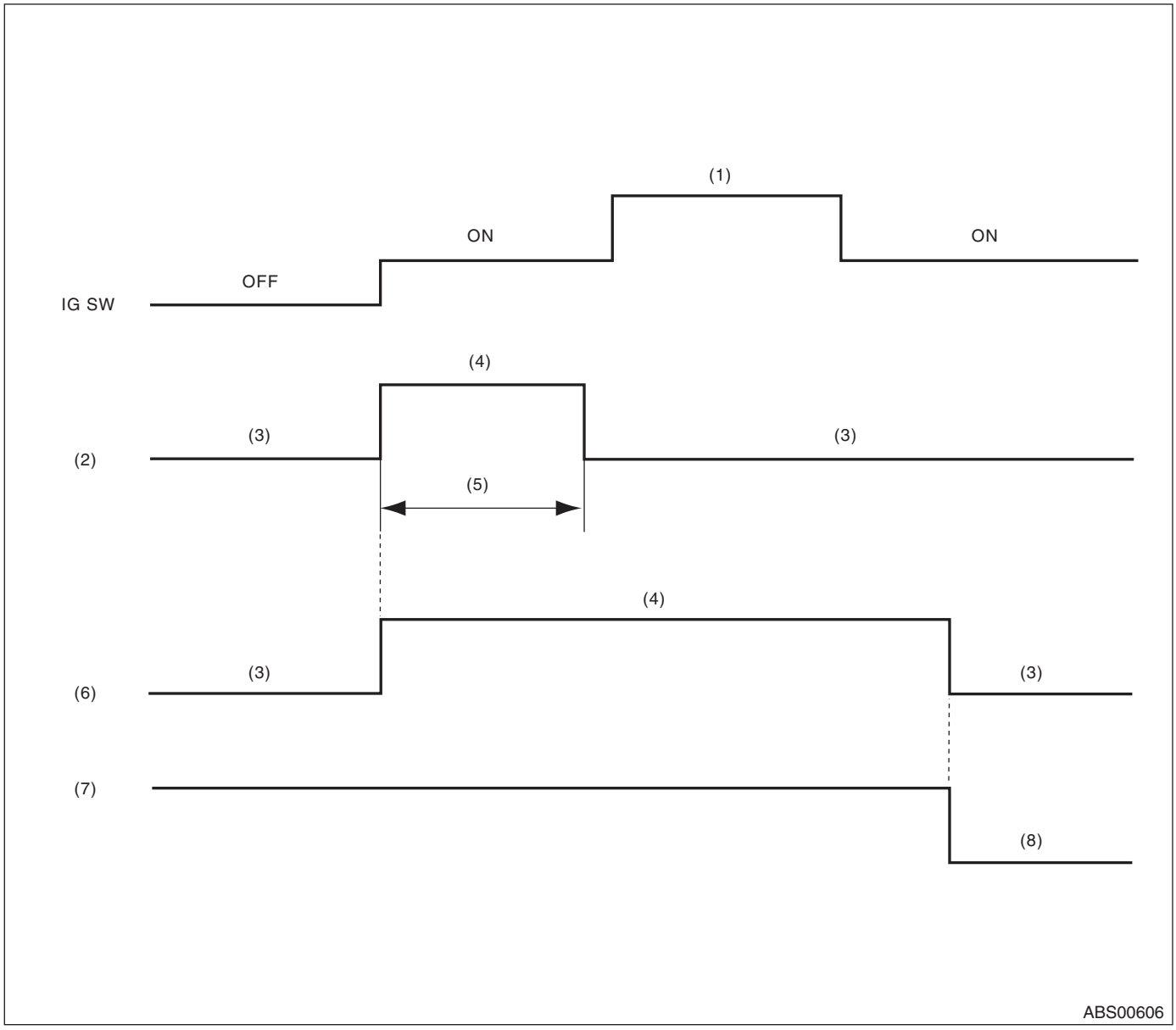

(1)	Start	(5)	Approx. 2 sec.	(7)	Parking brake
(2)	ABS warning light	(6)	Brake warning light (EBD warning light)	(8)	Released
(3)	Light OFF				
(4)	Light ON				

1) When the ABS warning light does not illuminate in accordance with this illumination pattern, it can be thought that there is an electrical problem.
2) When the ABS warning light remains constantly OFF, repair the ABS warning light circuit or diagnosis circuit.

NOTE:
Even though the ABS warning light does not go off after 2 seconds from ABS warning light illumination, the ABS system operates normally when the warning light goes off while driving at approximately 12 km/h (7 MPH). However, the anti-lock brake system does not work while the ABS warning light is illuminated.

B: ABS WARNING LIGHT DOES NOT COME ON

DETECTING CONDITION:

- Defective combination meter
- Defective harness

TROUBLE SYMPTOM:

When the ignition switch is turned to ON (engine OFF), ABS warning light does not come on.

WIRING DIAGRAM:

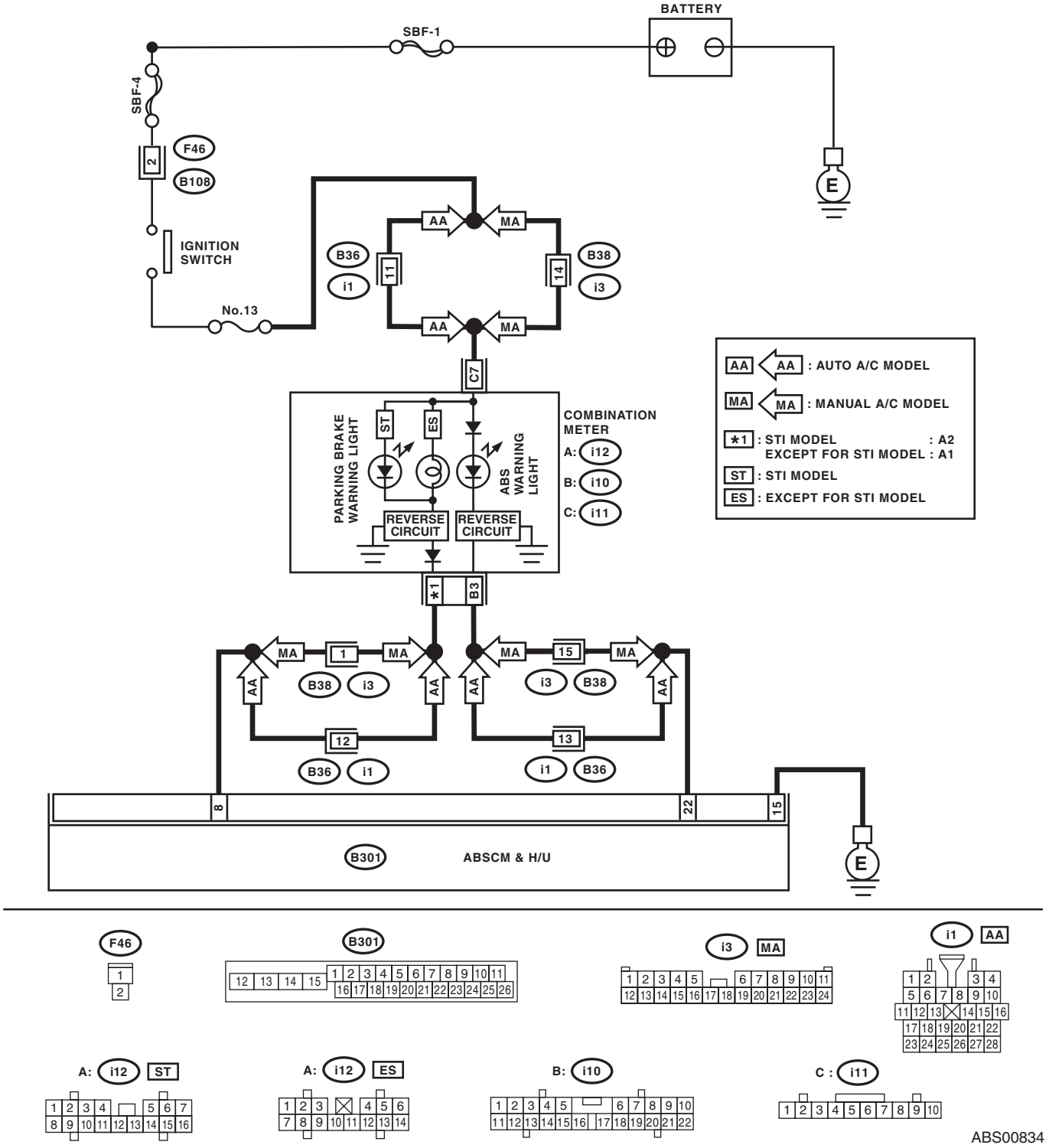

	Step	Check	Yes	No
1	**CHECK ILLUMINATION OF OTHER LIGHTS.** Turn the ignition switch to ON. (engine OFF)	Do other warning lights illuminate?	Go to step **2**.	Check the combination meter.
2	**READ DTC.** Read the DTC. <Ref. to ABS(diag)-24, Read Diagnostic Trouble Code (DTC).>	Is DTC displayed?	Perform the diagnosis according to DTC.	Go to step **3**.
3	**CHECK GROUND SHORT OF HARNESS.** 1) Turn the ignition OFF. 2) Disconnect the ABSCM&H/U connectors. 3) Disconnect the connector from the combination meter. 4) Measure the resistance between ABSCM connector and chassis ground. ***Connector & terminal*** ***(B301) No. 22 — Chassis ground:***	Is the resistance 1 MΩ or more?	Go to step **4**.	Repair harness and connector between ABSCM&H/U and combination meter.
4	**CHECK ABSCM.** 1) Connect the connector to the ABSCM&H/U. 2) Turn the ignition to ON. 3) Measure the resistance between the combination meter connector and chassis ground soon after the ignition switch is turned to ON (within 1.5 seconds). ***Connector & terminal*** ***(i10) No. 3 — Chassis ground:***	Is the resistance 1 MΩ or more?	Check the combination meter.	Replace the ABSCM only. <Ref. to ABS-7, REPLACEMENT, ABS Control Module and Hydraulic Control Unit (ABSCM&H/U).>

C: ABS WARNING LIGHT DOES NOT GO OFF

DETECTING CONDITION:

- Defective combination meter
- Open circuit of harness

TROUBLE SYMPTOM:

When starting the engine, the ABS warning light is kept on.

WIRING DIAGRAM:

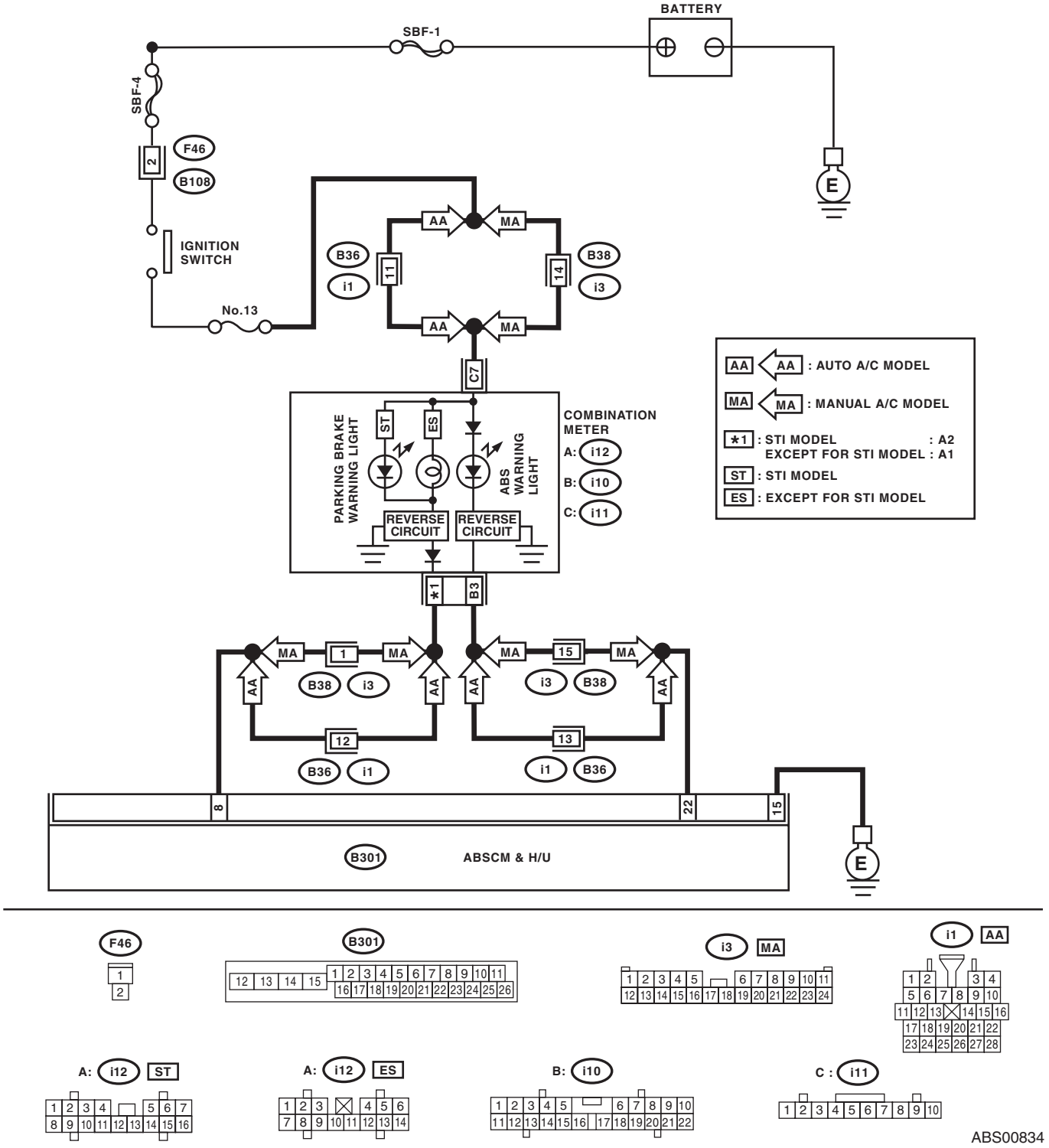

Step		Check	Yes	No
1	**READ DTC.** Read the DTC. <Ref. to ABS(diag)-24, Read Diagnostic Trouble Code (DTC).>	Is DTC displayed?	Perform the diagnosis according to DTC.	Go to step **2**.
2	**CHECK WIRING HARNESS.** 1) Turn the ignition OFF. 2) Disconnect the ABSCM&H/U connectors. 3) Disconnect the connector from the combination meter. 4) Measure the resistance between ABSCM connector and combination meter connector. ***Connector & terminal*** ***(B301) No. 22 — (i10) No. 3:***	Is resistance less than 0.5 Ω?	Go to step **3**.	Repair harness and connector between ABSCM&H/U and combination meter.
3	**CHECK POOR CONTACT OF CONNECTOR.** Check for poor contact of all connectors.	Is there poor contact?	Repair the connector.	Go to step **4**.
4	**CHECK ABSCM.** 1) Connect the connector to the ABSCM&H/U. 2) Turn the ignition switch to ON. 3) Measure the resistance between combination meter connector and chassis ground. ***Connector & terminal*** ***(i10) No. 3 — Chassis ground:***	Is resistance less than 0.5 Ω?	Check the combination meter.	Replace the ABSCM only. <Ref. to ABS-7, REPLACEMENT, ABS Control Module and Hydraulic Control Unit (ABSCM&H/U).>

D: BRAKE WARNING LIGHT DOES NOT GO OFF

DETECTING CONDITION:

- Brake warning light circuit is shorted.
- Defective sensor/connector

TROUBLE SYMPTOM:

After starting the engine, the brake warning light remains lit though the parking lever is released.

WIRING DIAGRAM:

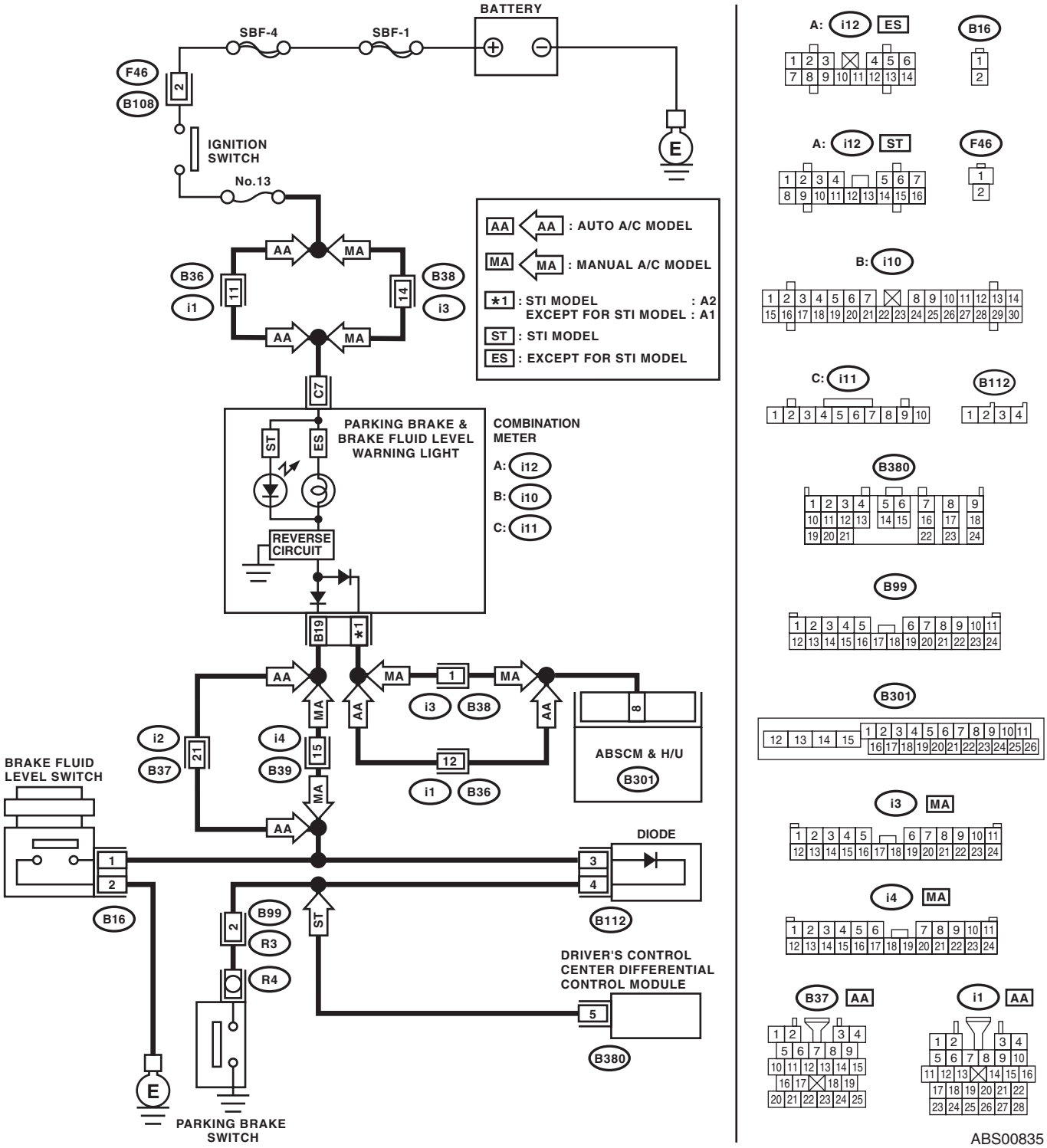

	Step	Check	Yes	No
1	**CHECK INSTALLATION OF ABSCM&H/U CONNECTOR.** 1) Turn the ignition switch to OFF. 2) Check that the ABSCM&H/U connector is inserted to ABSCM&H/U until the clamp locks onto it.	Is the connector firmly inserted?	Go to step **2**.	Insert the ABSCM&H/U connector until the clamp locks completely.
2	**READ DTC.** Read the DTC. <Ref. to ABS(diag)-24, Read Diagnostic Trouble Code (DTC).>	Is DTC displayed?	Perform the diagnosis according to DTC.	Go to step **3**.
3	**CHECK BRAKE FLUID AMOUNT.** Check the amount of brake fluid in the reservoir tank of the master cylinder.	Is the amount of brake fluid between the lines of “MAX” and “MIN”?	Go to step **4**.	Replenish brake fluid to the specified value.
4	**CHECK BRAKE FLUID LEVEL SWITCH.** 1) Disconnect brake fluid level switch connector (B16) from the master cylinder. 2) Measure the resistance between brake fluid switch terminals. ***Terminals*** ***No. 1 — No. 2:***	Is the resistance 1 MΩ or more?	Go to step **5**.	Replace the master cylinder.
5	**CHECK PARKING BRAKE SWITCH.** 1) Disconnect the connector (R4) from parking brake switch. 2) Release the parking brake. 3) Measure the resistance between parking brake switch terminal and chassis ground.	Is the resistance 1 MΩ or more?	Go to step **6**.	Replace the parking brake switch.
6	**CHECK GROUND SHORT OF HARNESS.** 1) Disconnect the connector from the combination meter. 2) Measure the resistance between combination meter connector and chassis ground. ***Connector & terminal*** ***(i10) No. 19 — Chassis ground:***	Is the resistance 1 MΩ or more?	Go to step **7**.	Repair the harness connector between combination meter and parking brake switch.
7	**CHECK HARNESS.** 1) Disconnect the ABSCM&H/U connectors. 2) Disconnect the connector from the combination meter. 3) Measure the resistance between the ABSCM&H/U connector and combination meter connector. ***Connector & terminal*** ***(B301) No. 8 — (i12) No. 1:***	Is resistance less than 0.5 Ω?	Go to step **8**.	Repair the harness between the ABSCM&H/U and the combination meter.
8	**CHECK POOR CONTACT OF CONNECTOR.** Check for poor contact of all connectors.	Is there poor contact?	Repair the connector.	Go to step **9**.
9	**CHECK ABSCM.** 1) Connect the connector to the ABSCM&H/U. 2) Turn the ignition switch to ON. 3) Measure the resistance between combination meter connector and chassis ground. ***Connector & terminal*** ***(i12) No. 1 — Chassis ground:***	Is resistance less than 0.5 Ω?	Check the combination meter.	Replace the ABSCM only. <Ref. to ABS-7, REPLACEMENT, ABS Control Module and Hydraulic Control Unit (ABSCM&H/U).>